The materials listed below are typical of a Class D house. Variations from these specifications can be found. Substitute materials of equivalent price and quality may be used in place of some of the materials listed below. See the pricing examples and the Adjustments and Additions section for those types of variations which normally require adjustments. Other variations should be considered when determining the final class. **NOTE:** In the single-family sections, the base interior wall height is 8 feet for each floor. For each foot of variation, add to or deduct from that portion of the residence *base cost only,* 2% for all residence exterior masonry walls, including brick and stone veneers, and 1.5% for siding exterior walls. See Page 4 for further discussion and calculation.

EXTERIOR WALLS: either A or B

A) WOOD FRAME with siding of:

Aluminum
Wood
Vinyl
Cement fiber (asbestos)
Asphalt
Brick veneer

BASIC WALL STRUCTURE includes:

Building paper
1/2" insulation board
2" x 4" studs, 16" o.c.
3/8" drywall
Interior surface painted, one coat
Two exterior doors
One aluminum storm and screen door

B) MASONRY CONSTRUCTION

8" Concrete block
Interior surface painted, one coat
Two exterior doors
One aluminum storm and screen door

WINDOWS: (10% of wall area)

Wood double hung

ROOF:

4/12 pitch
210# asphalt shingle
Felt
3/8" plywood
2" x 4" truss, 24" o.c.

INTERIOR PARTITIONS AND FINISH:

8'-0" high walls
3/8" drywall, two sides
Painted, one coat, two sides
2" x 4" studs, 16" o.c.
Softwood trim
Flush, hollow-core doors

FLOOR FINISH:

80% softwood or carpet w/ pad and underlayment
20% linoleum or vinyl sheet with underlayment

CEILING:

3/8" drywall
Painted, one coat
4" insulation

EXCAVATION:

10-course basement

BASEMENT WALLS:

10-course, 8" concrete block
8" x 16" footings
Waterproofing
Drain tile, one side

BASEMENT FLOOR:

3" gravel base
3" concrete floor

FLOOR CONSTRUCTION:

1/2" plywood
2" x 8" joists, 16" o.c.
Bridging
Wood beam
Wood posts

HEATING AND AIR CONDITIONING:

Gas-fired forced-air furnace with no cold air return ducts

ELECTRIC:

60-Ampere, 110/220-Volt system
Romex wiring

PLUMBING:

White fixtures:
One lavatory
One water closet
One bathtub with shower
One single-compartment kitchen sink
One 30-gallon water heater
One floor drain

BUILT-IN UNITS:

Laminated plastic kitchen cabinets:
12' base with laminated plastic top
8' wall mounted, 30" high
2' wall mounted, 18" high
Open-riser basement stairs

©2003 - State of Michigan

CLASS D

©2003 - State of Michigan

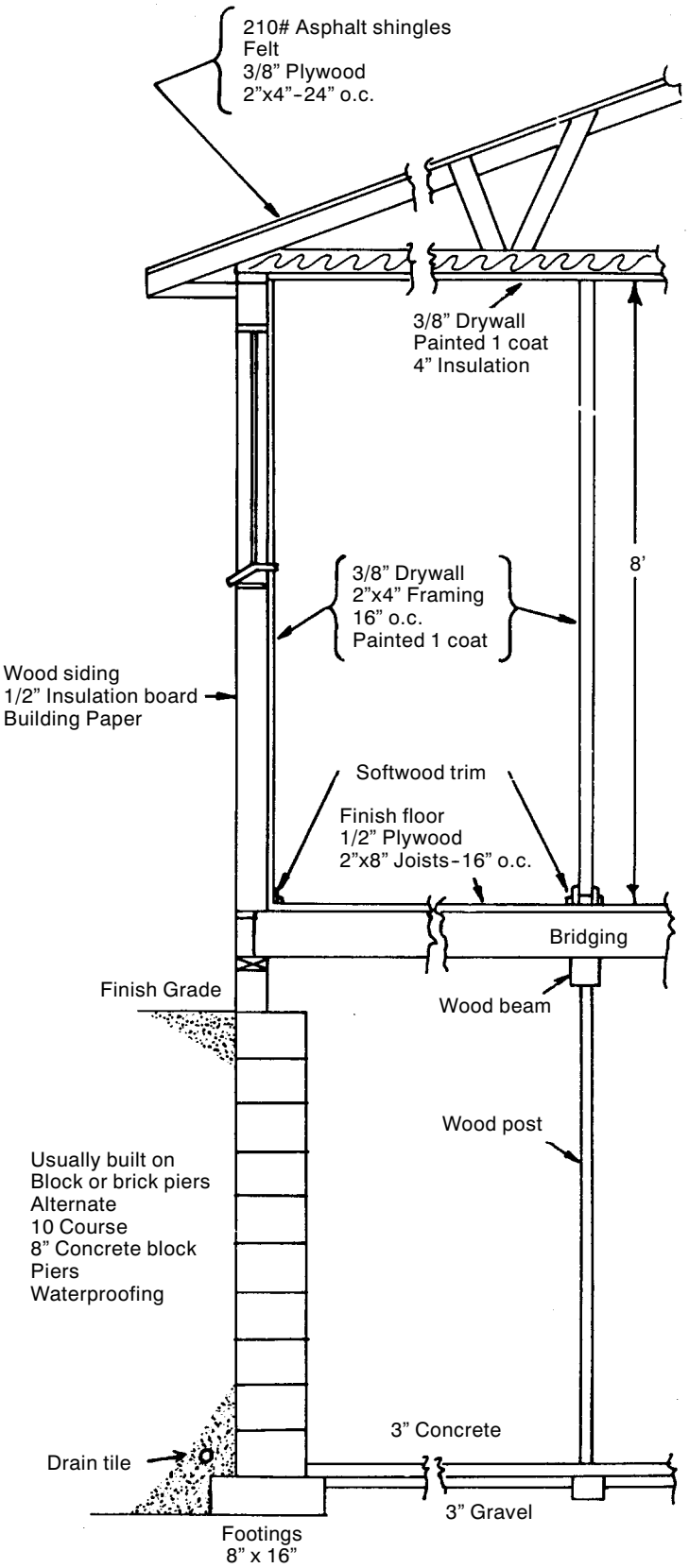

©2003 - State of Michigan

CLASS D
1 STORY

SQUARE FOOT COSTS

Ground Area	FRAME Siding	FRAME Brick Veneer	MASONRY Block Walls	BASEMENT ADJUSTMENTS Wood Basement	BASEMENT ADJUSTMENTS Crawl Space Only	BASEMENT ADJUSTMENTS Slab on Grade Only	Ground Area
400	63.46	75.94	64.32	-5.07	-10.81	-11.86	**400**
450	60.71	72.36	61.48	-4.80	-10.47	-11.52	**450**
500	58.51	69.52	59.21	-4.57	-10.17	-11.22	**500**
550	56.71	67.16	57.35	-4.37	- 9.91	-10.96	**550**
600	55.30	65.38	55.91	-4.19	- 9.68	-10.73	**600**
650	53.94	63.54	54.47	-4.04	- 9.47	-10.52	**650**
700	52.92	62.27	53.43	-3.90	- 9.28	-10.32	**700**
750	51.96	61.01	52.45	-3.78	- 9.11	-10.15	**750**
800	51.10	59.92	51.58	-3.67	- 8.95	- 9.99	**800**
850	50.29	58.84	50.73	-3.56	- 8.81	- 9.84	**850**
900	49.63	57.97	50.05	-3.47	- 8.67	- 9.70	**900**
950	49.05	57.21	49.43	-3.38	- 8.54	- 9.57	**950**
1000	48.46	56.41	48.82	-3.30	- 8.42	- 9.45	**1000**
1050	47.98	55.79	48.33	-3.23	- 8.31	- 9.34	**1050**
1100	47.53	55.22	47.87	-3.16	- 8.21	- 9.23	**1100**
1150	47.09	54.60	47.40	-3.09	- 8.11	- 9.13	**1150**
1200	46.66	54.03	46.98	-3.03	- 8.02	- 9.03	**1200**
1250	46.34	53.61	46.62	-2.98	- 7.93	- 8.94	**1250**
1300	45.97	53.12	46.25	-2.92	- 7.84	- 8.86	**1300**
1350	45.68	52.75	45.95	-2.87	- 7.76	- 8.77	**1350**
1400	45.33	52.25	45.58	-2.82	- 7.69	- 8.70	**1400**
1450	45.09	51.94	45.33	-2.78	- 7.61	- 8.62	**1450**
1500	44.83	51.58	45.04	-2.73	- 7.54	- 8.55	**1500**
1550	44.60	51.30	44.83	-2.69	- 7.48	- 8.48	**1550**
1600	44.29	50.85	44.51	-2.65	- 7.41	- 8.41	**1600**
1650	44.10	50.61	44.30	-2.61	- 7.35	- 8.35	**1650**
1700	43.90	50.32	44.09	-2.58	- 7.29	- 8.29	**1700**
1750	43.72	50.11	43.91	-2.54	- 7.23	- 8.23	**1750**
1800	43.47	49.74	43.64	-2.51	- 7.18	- 8.17	**1800**
1850	43.28	49.49	43.45	-2.48	- 7.13	- 8.12	**1850**
1900	43.14	49.31	43.31	-2.45	- 7.07	- 8.06	**1900**
1950	42.99	49.10	43.14	-2.42	- 7.02	- 8.01	**1950**
2000	42.78	48.78	42.92	-2.39	- 6.98	- 7.96	**2000**
2050	42.64	48.59	42.77	-2.36	- 6.93	- 7.91	**2050**
2100	42.50	48.41	42.63	-2.33	- 6.88	- 7.86	**2100**
2150	42.38	48.27	42.52	-2.31	- 6.84	- 7.82	**2150**
2200	42.26	48.10	42.38	-2.28	- 6.80	- 7.77	**2200**
2250	42.08	47.84	42.21	-2.26	- 6.76	- 7.73	**2250**
2300	41.97	47.69	42.08	-2.24	- 6.72	- 7.69	**2300**
2350	41.85	47.53	41.95	-2.21	- 6.68	- 7.65	**2350**
2400	41.75	47.38	41.84	-2.19	- 6.64	- 7.61	**2400**
2450	41.65	47.24	41.74	-2.17	- 6.60	- 7.57	**2450**
2500	41.51	47.03	41.59	-2.15	- 6.57	- 7.53	**2500**
2550	41.41	46.90	41.48	-2.13	- 6.53	- 7.50	**2550**
2600	41.32	46.78	41.39	-2.11	- 6.50	- 7.46	**2600**
2650	41.23	46.65	41.29	-2.09	- 6.46	- 7.42	**2650**
2700	41.12	46.51	41.19	-2.07	- 6.43	- 7.39	**2700**
2750	41.00	46.33	41.05	-2.06	- 6.40	- 7.36	**2750**
2800	40.92	46.23	40.96	-2.04	- 6.37	- 7.32	**2800**
2850	40.84	46.12	40.90	-2.02	- 6.34	- 7.29	**2850**
2900	40.77	46.01	40.82	-2.01	- 6.31	- 7.26	**2900**
2950	40.68	45.90	40.72	-1.99	- 6.28	- 7.23	**2950**
3000	40.60	45.80	40.65	-1.98	- 6.25	- 7.20	**3000**

©2003 - State of Michigan

SQUARE FOOT COSTS

CLASS D
1+ STORY

Ground Area	FRAME Siding	FRAME Brick Veneer	MASONRY Block Walls	BASEMENT ADJUSTMENTS Wood Basement	BASEMENT ADJUSTMENTS Crawl Space Only	BASEMENT ADJUSTMENTS Slab on Grade Only	Ground Area
400	66.13	79.32	67.06	-5.07	-10.81	-11.86	**400**
450	63.27	75.58	64.15	-4.80	-10.47	-11.52	**450**
500	60.97	72.60	61.83	-4.57	-10.17	-11.22	**500**
550	59.09	70.15	59.93	-4.37	- 9.91	-10.96	**550**
600	57.63	68.30	58.46	-4.19	- 9.68	-10.73	**600**
650	56.20	66.37	56.99	-4.04	- 9.47	-10.52	**650**
700	55.14	65.04	55.94	-3.90	- 9.28	-10.32	**700**
750	54.13	63.74	54.93	-3.78	- 9.11	-10.15	**750**
800	53.26	62.60	54.04	-3.67	- 8.95	- 9.99	**800**
850	52.42	61.45	53.17	-3.56	- 8.81	- 9.84	**850**
900	51.73	60.56	52.49	-3.47	- 8.67	- 9.70	**900**
950	51.10	59.76	51.86	-3.38	- 8.54	- 9.57	**950**
1000	50.50	58.93	51.25	-3.30	- 8.42	- 9.45	**1000**
1050	49.99	58.27	50.74	-3.23	- 8.31	- 9.34	**1050**
1100	49.54	57.67	50.28	-3.16	- 8.21	- 9.23	**1100**
1150	49.06	57.04	49.80	-3.09	- 8.11	- 9.13	**1150**
1200	48.63	56.44	49.36	-3.03	- 8.02	- 9.03	**1200**
1250	48.28	55.99	49.01	-2.98	- 7.93	- 8.94	**1250**
1300	47.91	55.49	48.63	-2.92	- 7.84	- 8.86	**1300**
1350	47.61	55.11	48.34	-2.87	- 7.76	- 8.77	**1350**
1400	47.24	54.58	47.96	-2.82	- 7.69	- 8.70	**1400**
1450	46.97	54.26	47.70	-2.78	- 7.61	- 8.62	**1450**
1500	46.70	53.87	47.42	-2.73	- 7.54	- 8.55	**1500**
1550	46.46	53.58	47.20	-2.69	- 7.48	- 8.48	**1550**
1600	46.15	53.11	46.87	-2.65	- 7.41	- 8.41	**1600**
1650	45.96	52.86	46.67	-2.61	- 7.35	- 8.35	**1650**
1700	45.74	52.55	46.44	-2.58	- 7.29	- 8.29	**1700**
1750	45.55	52.34	46.26	-2.54	- 7.23	- 8.23	**1750**
1800	45.30	51.95	46.00	-2.51	- 7.18	- 8.17	**1800**
1850	45.12	51.70	45.82	-2.48	- 7.13	- 8.12	**1850**
1900	44.96	51.51	45.67	-2.45	- 7.07	- 8.06	**1900**
1950	44.80	51.29	45.50	-2.42	- 7.02	- 8.01	**1950**
2000	44.57	50.96	45.27	-2.39	- 6.98	- 7.96	**2000**
2050	44.43	50.75	45.12	-2.36	- 6.93	- 7.91	**2050**
2100	44.28	50.55	44.97	-2.33	- 6.88	- 7.86	**2100**
2150	44.17	50.42	44.87	-2.31	- 6.84	- 7.82	**2150**
2200	44.03	50.24	44.72	-2.28	- 6.80	- 7.77	**2200**
2250	43.86	49.97	44.55	-2.26	- 6.76	- 7.73	**2250**
2300	43.74	49.80	44.42	-2.24	- 6.72	- 7.69	**2300**
2350	43.61	49.65	44.30	-2.21	- 6.68	- 7.65	**2350**
2400	43.51	49.49	44.20	-2.19	- 6.64	- 7.61	**2400**
2450	43.40	49.35	44.09	-2.17	- 6.60	- 7.57	**2450**
2500	43.25	49.13	43.93	-2.15	- 6.57	- 7.53	**2500**
2550	43.14	48.99	43.83	-2.13	- 6.53	- 7.50	**2550**
2600	43.05	48.87	43.74	-2.11	- 6.50	- 7.46	**2600**
2650	42.96	48.73	43.64	-2.09	- 6.46	- 7.42	**2650**
2700	42.84	48.58	43.53	-2.07	- 6.43	- 7.39	**2700**
2750	42.73	48.39	43.40	-2.06	- 6.40	- 7.36	**2750**
2800	42.64	48.27	43.32	-2.04	- 6.37	- 7.32	**2800**
2850	42.56	48.17	43.25	-2.02	- 6.34	- 7.29	**2850**
2900	42.47	48.08	43.16	-2.01	- 6.31	- 7.26	**2900**
2950	42.38	47.94	43.07	-1.99	- 6.28	- 7.23	**2950**
3000	42.31	47.84	42.33	-1.98	- 6.25	- 7.20	**3000**

©2003 - State of Michigan

CLASS D
1-1/4 STORY

SQUARE FOOT COSTS

Ground Area	FRAME Siding	FRAME Brick Veneer	MASONRY Block Walls	BASEMENT ADJUSTMENTS Wood Basement	BASEMENT ADJUSTMENTS Crawl Space Only	BASEMENT ADJUSTMENTS Slab on Grade Only	Ground Area
400	73.49	87.70	74.82	-5.07	-10.81	-11.86	**400**
450	70.32	83.57	71.52	-4.80	-10.47	-11.52	**450**
500	67.76	80.28	68.88	-4.57	-10.17	-11.22	**500**
550	65.67	77.57	66.71	-4.37	- 9.91	-10.96	**550**
600	64.03	75.51	65.02	-4.19	- 9.68	-10.73	**600**
650	62.46	73.39	63.37	-4.04	- 9.47	-10.52	**650**
700	61.27	71.92	62.16	-3.90	- 9.28	-10.32	**700**
750	60.16	70.48	61.00	-3.78	- 9.11	-10.15	**750**
800	59.18	69.22	60.00	-3.67	- 8.95	- 9.99	**800**
850	58.26	67.94	59.02	-3.56	- 8.81	- 9.84	**850**
900	57.48	66.96	58.22	-3.47	- 8.67	- 9.70	**900**
950	56.79	66.08	57.51	-3.38	- 8.54	- 9.57	**950**
1000	56.11	65.15	56.80	-3.30	- 8.42	- 9.45	**1000**
1050	55.56	64.43	56.21	-3.23	- 8.31	- 9.34	**1050**
1100	55.05	63.77	55.68	-3.16	- 8.21	- 9.23	**1100**
1150	54.52	63.06	55.15	-3.09	- 8.11	- 9.13	**1150**
1200	54.04	62.42	54.64	-3.03	- 8.02	- 9.03	**1200**
1250	53.65	61.92	54.23	-2.98	- 7.93	- 8.94	**1250**
1300	53.24	61.35	53.80	-2.92	- 7.84	- 8.86	**1300**
1350	52.90	60.94	53.45	-2.87	- 7.76	- 8.77	**1350**
1400	52.51	60.36	53.03	-2.82	- 7.69	- 8.70	**1400**
1450	52.22	59.99	52.73	-2.78	- 7.61	- 8.62	**1450**
1500	51.90	59.57	52.40	-2.73	- 7.54	- 8.55	**1500**
1550	51.64	59.25	52.14	-2.69	- 7.48	- 8.48	**1550**
1600	51.30	58.72	51.76	-2.65	- 7.41	- 8.41	**1600**
1650	51.07	58.45	51.53	-2.61	- 7.35	- 8.35	**1650**
1700	50.82	58.12	51.28	-2.58	- 7.29	- 8.29	**1700**
1750	50.63	57.88	51.08	-2.54	- 7.23	- 8.23	**1750**
1800	50.35	57.44	50.77	-2.51	- 7.18	- 8.17	**1800**
1850	50.13	57.17	50.55	-2.48	- 7.13	- 8.12	**1850**
1900	49.96	56.96	50.39	-2.45	- 7.07	- 8.06	**1900**
1950	49.78	56.71	50.19	-2.42	- 7.02	- 8.01	**1950**
2000	49.54	56.34	49.93	-2.39	- 6.98	- 7.96	**2000**
2050	49.37	56.11	49.76	-2.36	- 6.93	- 7.91	**2050**
2100	49.21	55.91	49.59	-2.33	- 6.88	- 7.86	**2100**
2150	49.09	55.75	49.45	-2.31	- 6.84	- 7.82	**2150**
2200	48.93	55.54	49.29	-2.28	- 6.80	- 7.77	**2200**
2250	48.73	55.26	49.08	-2.26	- 6.76	- 7.73	**2250**
2300	48.61	55.07	48.94	-2.24	- 6.72	- 7.69	**2300**
2350	48.47	54.90	48.80	-2.21	- 6.68	- 7.65	**2350**
2400	48.34	54.73	48.68	-2.19	- 6.64	- 7.61	**2400**
2450	48.22	54.57	48.56	-2.17	- 6.60	- 7.57	**2450**
2500	48.05	54.32	48.38	-2.15	- 6.57	- 7.53	**2500**
2550	47.95	54.16	48.25	-2.13	- 6.53	- 7.50	**2550**
2600	47.84	54.03	48.15	-2.11	- 6.50	- 7.46	**2600**
2650	47.73	53.89	48.04	-2.09	- 6.46	- 7.42	**2650**
2700	47.61	53.72	47.91	-2.07	- 6.43	- 7.39	**2700**
2750	47.48	53.50	47.76	-2.06	- 6.40	- 7.36	**2750**
2800	47.38	53.39	47.67	-2.04	- 6.37	- 7.32	**2800**
2850	47.29	53.27	47.56	-2.02	- 6.34	- 7.29	**2850**
2900	47.20	53.15	47.49	-2.01	- 6.31	- 7.26	**2900**
2950	47.10	53.00	47.37	-1.99	- 6.28	- 7.23	**2950**
3000	47.02	52.89	47.28	-1.98	- 6.25	- 7.20	**3000**

©2003 - State of Michigan

SQUARE FOOT COSTS

CLASS D
1-1/2 STORY

Ground Area	FRAME		MASONRY	BASEMENT ADJUSTMENTS			Ground Area
	Siding	Brick Veneer	Block Walls	Wood Basement	Crawl Space Only	Slab on Grade Only	
400	80.90	96.47	81.74	-5.07	-10.81	-11.86	**400**
450	77.41	91.94	78.15	-4.80	-10.47	-11.52	**450**
500	74.61	88.30	75.26	-4.57	-10.17	-11.22	**500**
550	72.30	85.32	72.90	-4.37	- 9.91	-10.96	**550**
600	70.50	83.06	71.05	-4.19	- 9.68	-10.73	**600**
650	68.75	80.73	69.24	-4.04	- 9.47	-10.52	**650**
700	67.45	79.11	67.91	-3.90	- 9.28	-10.32	**700**
750	66.24	77.52	66.66	-3.78	- 9.11	-10.15	**750**
800	65.17	76.13	65.55	-3.67	- 8.95	- 9.99	**800**
850	64.14	74.74	64.49	-3.56	- 8.81	- 9.84	**850**
900	63.29	73.66	63.61	-3.47	- 8.67	- 9.70	**900**
950	62.53	72.68	62.83	-3.38	- 8.54	- 9.57	**950**
1000	61.79	71.66	62.06	-3.30	- 8.42	- 9.45	**1000**
1050	61.17	70.87	61.42	-3.23	- 8.31	- 9.34	**1050**
1100	60.60	70.15	60.84	-3.16	- 8.21	- 9.23	**1100**
1150	60.04	69.38	60.24	-3.09	- 8.11	- 9.13	**1150**
1200	59.50	68.65	59.70	-3.03	- 8.02	- 9.03	**1200**
1250	59.06	68.11	59.26	-2.98	- 7.93	- 8.94	**1250**
1300	58.61	67.49	58.78	-2.92	- 7.84	- 8.86	**1300**
1350	58.25	67.02	58.41	-2.87	- 7.76	- 8.77	**1350**
1400	57.81	66.40	57.94	-2.82	- 7.69	- 8.70	**1400**
1450	57.48	66.00	57.62	-2.78	- 7.61	- 8.62	**1450**
1500	57.14	65.52	57.26	-2.73	- 7.54	- 8.55	**1500**
1550	56.86	65.17	56.97	-2.69	- 7.48	- 8.48	**1550**
1600	56.47	64.60	56.55	-2.65	- 7.41	- 8.41	**1600**
1650	56.23	64.29	56.31	-2.61	- 7.35	- 8.35	**1650**
1700	55.97	63.93	56.03	-2.58	- 7.29	- 8.29	**1700**
1750	55.74	63.65	55.80	-2.54	- 7.23	- 8.23	**1750**
1800	55.43	63.18	55.47	-2.51	- 7.18	- 8.17	**1800**
1850	55.20	62.88	55.23	-2.48	- 7.13	- 8.12	**1850**
1900	55.02	62.65	55.05	-2.45	- 7.07	- 8.06	**1900**
1950	54.81	62.38	54.83	-2.42	- 7.02	- 8.01	**1950**
2000	54.55	61.97	54.56	-2.39	- 6.98	- 7.96	**2000**
2050	54.36	61.73	54.35	-2.36	- 6.93	- 7.91	**2050**
2100	54.18	61.48	54.18	-2.33	- 6.88	- 7.86	**2100**
2150	54.05	61.32	54.04	-2.31	- 6.84	- 7.82	**2150**
2200	53.88	61.10	53.87	-2.28	- 6.80	- 7.77	**2200**
2250	53.66	60.77	53.64	-2.26	- 6.76	- 7.73	**2250**
2300	53.52	60.58	53.48	-2.24	- 6.72	- 7.69	**2300**
2350	53.37	60.39	53.33	-2.21	- 6.68	- 7.65	**2350**
2400	53.23	60.20	53.19	-2.19	- 6.64	- 7.61	**2400**
2450	53.11	60.03	53.05	-2.17	- 6.60	- 7.57	**2450**
2500	52.92	59.74	52.85	-2.15	- 6.57	- 7.53	**2500**
2550	52.80	59.59	52.73	-2.13	- 6.53	- 7.50	**2550**
2600	52.69	59.43	52.61	-2.11	- 6.50	- 7.46	**2600**
2650	52.56	59.28	52.48	-2.09	- 6.46	- 7.42	**2650**
2700	52.44	59.09	52.35	-2.07	- 6.43	- 7.39	**2700**
2750	52.27	58.85	52.18	-2.06	- 6.40	- 7.36	**2750**
2800	52.18	58.72	52.08	-2.04	- 6.37	- 7.32	**2800**
2850	52.08	58.59	51.98	-2.02	- 6.34	- 7.29	**2850**
2900	51.99	58.47	51.88	-2.01	- 6.31	- 7.26	**2900**
2950	51.87	58.30	51.76	-1.99	- 6.28	- 7.23	**2950**
3000	51.78	58.18	51.67	-1.98	- 6.25	- 7.20	**3000**

©2003 - State of Michigan

CLASS D
1-3/4 STORY

SQUARE FOOT COSTS

Ground Area	FRAME Siding	FRAME Brick Veneer	MASONRY Block Walls	BASEMENT ADJUSTMENTS Wood Basement	BASEMENT ADJUSTMENTS Crawl Space Only	BASEMENT ADJUSTMENTS Slab on Grade Only	Ground Area
400	91.07	109.62	92.13	-5.07	-10.81	-11.86	**400**
450	87.13	104.47	88.09	-4.80	-10.47	-11.52	**450**
500	83.97	100.33	84.83	-4.57	-10.17	-11.22	**500**
550	81.39	96.95	82.17	-4.37	- 9.91	-10.96	**550**
600	79.36	94.39	80.08	-4.19	- 9.68	-10.73	**600**
650	77.40	91.74	78.04	-4.04	- 9.47	-10.52	**650**
700	75.93	89.89	76.56	-3.90	- 9.28	-10.32	**700**
750	74.55	88.10	75.13	-3.78	- 9.11	-10.15	**750**
800	73.35	86.52	73.88	-3.67	- 8.95	- 9.99	**800**
850	72.19	84.94	72.68	-3.56	- 8.81	- 9.84	**850**
900	71.23	83.70	71.71	-3.47	- 8.67	- 9.70	**900**
950	70.39	82.59	70.83	-3.38	- 8.54	- 9.57	**950**
1000	69.55	81.43	69.94	-3.30	- 8.42	- 9.45	**1000**
1050	68.84	80.53	69.24	-3.23	- 8.31	- 9.34	**1050**
1100	68.22	79.71	68.58	-3.16	- 8.21	- 9.23	**1100**
1150	67.58	78.83	67.91	-3.09	- 8.11	- 9.13	**1150**
1200	66.98	78.02	67.29	-3.03	- 8.02	- 9.03	**1200**
1250	66.49	77.39	66.80	-2.98	- 7.93	- 8.94	**1250**
1300	65.98	76.69	66.26	-2.92	- 7.84	- 8.86	**1300**
1350	65.56	76.16	65.84	-2.87	- 7.76	- 8.77	**1350**
1400	65.06	75.44	65.30	-2.82	- 7.69	- 8.70	**1400**
1450	64.72	74.99	64.95	-2.78	- 7.61	- 8.62	**1450**
1500	64.33	74.46	64.54	-2.73	- 7.54	- 8.55	**1500**
1550	64.01	74.06	64.21	-2.69	- 7.48	- 8.48	**1550**
1600	63.57	73.39	63.75	-2.65	- 7.41	- 8.41	**1600**
1650	63.29	73.05	63.47	-2.61	- 7.35	- 8.35	**1650**
1700	63.00	72.64	63.15	-2.58	- 7.29	- 8.29	**1700**
1750	62.75	72.35	62.91	-2.54	- 7.23	- 8.23	**1750**
1800	62.39	71.79	62.53	-2.51	- 7.18	- 8.17	**1800**
1850	62.13	71.44	62.26	-2.48	- 7.13	- 8.12	**1850**
1900	61.93	71.20	62.05	-2.45	- 7.07	- 8.06	**1900**
1950	61.69	70.88	61.81	-2.42	- 7.02	- 8.01	**1950**
2000	61.39	70.43	61.48	-2.39	- 6.98	- 7.96	**2000**
2050	61.18	70.15	61.28	-2.36	- 6.93	- 7.91	**2050**
2100	60.99	69.88	61.06	-2.33	- 6.88	- 7.86	**2100**
2150	60.83	69.68	60.91	-2.31	- 6.84	- 7.82	**2150**
2200	60.65	69.43	60.71	-2.28	- 6.80	- 7.77	**2200**
2250	60.40	69.06	60.45	-2.26	- 6.76	- 7.73	**2250**
2300	60.24	68.84	60.27	-2.24	- 6.72	- 7.69	**2300**
2350	60.08	68.62	60.12	-2.21	- 6.68	- 7.65	**2350**
2400	59.92	68.41	59.94	-2.19	- 6.64	- 7.61	**2400**
2450	59.77	68.21	59.80	-2.17	- 6.60	- 7.57	**2450**
2500	59.57	67.89	59.57	-2.15	- 6.57	- 7.53	**2500**
2550	59.43	67.72	59.43	-2.13	- 6.53	- 7.50	**2550**
2600	59.30	67.53	59.29	-2.11	- 6.50	- 7.46	**2600**
2650	59.18	67.37	59.17	-2.09	- 6.46	- 7.42	**2650**
2700	59.02	67.14	59.00	-2.07	- 6.43	- 7.39	**2700**
2750	58.85	66.88	58.82	-2.06	- 6.40	- 7.36	**2750**
2800	58.72	66.73	58.69	-2.04	- 6.37	- 7.32	**2800**
2850	58.61	66.59	58.59	-2.02	- 6.34	- 7.29	**2850**
2900	58.52	66.44	58.48	-2.01	- 6.31	- 7.26	**2900**
2950	58.38	66.25	58.34	-1.99	- 6.28	- 7.23	**2950**
3000	58.29	66.12	58.23	-1.98	- 6.25	- 7.20	**3000**

©2003 - State of Michigan

CLASS D
2 STORY

SQUARE FOOT COSTS

Ground Area	FRAME Siding	FRAME Brick Veneer	MASONRY Block Walls	BASEMENT ADJUSTMENTS Wood Basement	BASEMENT ADJUSTMENTS Crawl Space Only	BASEMENT ADJUSTMENTS Slab on Grade Only	Ground Area
400	99.80	118.40	99.07	-5.07	-10.81	-11.86	**400**
450	95.64	112.82	94.71	-4.80	-10.47	-11.52	**450**
500	92.32	108.37	91.21	-4.57	-10.17	-11.22	**500**
550	89.60	104.71	88.34	-4.37	- 9.91	-10.96	**550**
600	87.48	101.93	86.11	-4.19	- 9.68	-10.73	**600**
650	85.42	99.07	83.91	-4.04	- 9.47	-10.52	**650**
700	83.88	97.08	82.31	-3.90	- 9.28	-10.32	**700**
750	82.45	95.14	80.78	-3.78	- 9.11	-10.15	**750**
800	81.19	93.43	79.45	-3.67	- 8.95	- 9.99	**800**
850	79.97	91.72	78.15	-3.56	- 8.81	- 9.84	**850**
900	78.98	90.39	77.09	-3.47	- 8.67	- 9.70	**900**
950	78.10	89.19	76.15	-3.38	- 8.54	- 9.57	**950**
1000	77.22	87.96	75.21	-3.30	- 8.42	- 9.45	**1000**
1050	76.50	86.98	74.44	-3.23	- 8.31	- 9.34	**1050**
1100	75.86	86.09	73.74	-3.16	- 8.21	- 9.23	**1100**
1150	75.18	85.14	73.02	-3.09	- 8.11	- 9.13	**1150**
1200	74.57	84.25	72.35	-3.03	- 8.02	- 9.03	**1200**
1250	74.07	83.58	71.82	-2.98	- 7.93	- 8.94	**1250**
1300	73.54	82.83	71.25	-2.92	- 7.84	- 8.86	**1300**
1350	73.12	82.25	70.78	-2.87	- 7.76	- 8.77	**1350**
1400	72.61	81.48	70.22	-2.82	- 7.69	- 8.70	**1400**
1450	72.24	80.99	69.83	-2.78	- 7.61	- 8.62	**1450**
1500	71.85	80.42	69.40	-2.73	- 7.54	- 8.55	**1500**
1550	71.52	79.98	69.04	-2.69	- 7.48	- 8.48	**1550**
1600	71.08	79.27	68.54	-2.65	- 7.41	- 8.41	**1600**
1650	70.80	78.91	68.25	-2.61	- 7.35	- 8.35	**1650**
1700	70.49	78.45	67.90	-2.58	- 7.29	- 8.29	**1700**
1750	70.24	78.12	67.64	-2.54	- 7.23	- 8.23	**1750**
1800	69.88	77.53	67.22	-2.51	- 7.18	- 8.17	**1800**
1850	69.62	77.17	66.94	-2.48	- 7.13	- 8.12	**1850**
1900	69.40	76.89	66.72	-2.45	- 7.07	- 8.06	**1900**
1950	69.17	76.55	66.45	-2.42	- 7.02	- 8.01	**1950**
2000	68.87	76.06	66.11	-2.39	- 6.98	- 7.96	**2000**
2050	68.66	75.76	65.88	-2.36	- 6.93	- 7.91	**2050**
2100	68.44	75.46	65.65	-2.33	- 6.88	- 7.86	**2100**
2150	68.29	75.26	65.49	-2.31	- 6.84	- 7.82	**2150**
2200	68.11	74.99	65.28	-2.28	- 6.80	- 7.77	**2200**
2250	67.86	74.59	65.01	-2.26	- 6.76	- 7.73	**2250**
2300	67.69	74.33	64.82	-2.24	- 6.72	- 7.69	**2300**
2350	67.53	74.11	64.63	-2.21	- 6.68	- 7.65	**2350**
2400	67.38	73.87	64.45	-2.19	- 6.64	- 7.61	**2400**
2450	67.23	73.67	64.29	-2.17	- 6.60	- 7.57	**2450**
2500	67.02	73.33	64.05	-2.15	- 6.57	- 7.53	**2500**
2550	66.89	73.13	63.91	-2.13	- 6.53	- 7.50	**2550**
2600	66.76	72.94	63.75	-2.11	- 6.50	- 7.46	**2600**
2650	66.62	72.75	63.61	-2.09	- 6.46	- 7.42	**2650**
2700	66.48	72.51	63.44	-2.07	- 6.43	- 7.39	**2700**
2750	66.30	72.23	63.24	-2.06	- 6.40	- 7.36	**2750**
2800	66.18	72.07	63.12	-2.04	- 6.37	- 7.32	**2800**
2850	66.08	71.91	62.99	-2.02	- 6.34	- 7.29	**2850**
2900	65.98	71.75	62.88	-2.01	- 6.31	- 7.26	**2900**
2950	65.85	71.55	62.73	-1.99	- 6.28	- 7.23	**2950**
3000	65.75	71.41	62.62	-1.98	- 6.25	- 7.20	**3000**

©2003 - State of Michigan

CLASS D
BI-LEVEL

SQUARE FOOT COSTS

Ground Area	FRAME Siding	FRAME Brick Veneer	MASONRY Block Walls	LOWER LEVEL FINISH ADJUSTMENTS 20% Finish	40% Finish	60% Finish	80% Finish	Ground Area
400	80.87	97.31	81.65	-6.27	-4.22	-2.02	0.00	**400**
450	77.17	92.47	77.90	-5.94	-4.00	-1.92	0.00	**450**
500	74.21	88.58	74.87	-5.69	-3.82	-1.83	0.00	**500**
550	71.78	85.40	72.41	-5.48	-3.68	-1.77	0.00	**550**
600	69.95	83.08	70.56	-5.33	-3.59	-1.72	0.00	**600**
650	68.03	80.49	68.59	-5.15	-3.46	-1.66	0.00	**650**
700	66.72	78.86	67.28	-5.06	-3.40	-1.63	0.00	**700**
750	65.42	77.15	65.95	-4.94	-3.32	-1.59	0.00	**750**
800	64.28	75.66	64.79	-4.84	-3.25	-1.56	0.00	**800**
850	63.14	74.11	63.63	-4.73	-3.17	-1.52	0.00	**850**
900	62.24	72.95	62.73	-4.66	-3.13	-1.50	0.00	**900**
950	61.44	71.92	61.92	-4.58	-3.08	-1.47	0.00	**950**
1000	60.60	70.77	61.06	-4.49	-3.02	-1.44	0.00	**1000**
1050	59.95	69.93	60.39	-4.45	-2.98	-1.43	0.00	**1050**
1100	59.36	69.17	59.80	-4.39	-2.94	-1.41	0.00	**1100**
1150	58.72	68.29	59.14	-4.33	-2.90	-1.40	0.00	**1150**
1200	58.12	67.49	58.53	-4.27	-2.87	-1.37	0.00	**1200**
1250	57.68	66.90	58.07	-4.24	-2.84	-1.37	0.00	**1250**
1300	57.16	66.21	57.55	-4.18	-2.81	-1.35	0.00	**1300**
1350	56.77	65.72	57.17	-4.15	-2.78	-1.34	0.00	**1350**
1400	56.24	64.98	56.63	-4.09	-2.74	-1.32	0.00	**1400**
1450	55.92	64.56	56.30	-4.06	-2.72	-1.31	0.00	**1450**
1500	55.53	64.03	55.89	-4.03	-2.70	-1.29	0.00	**1500**
1550	55.25	63.68	55.60	-4.00	-2.69	-1.29	0.00	**1550**
1600	54.75	62.96	55.10	-3.94	-2.65	-1.26	0.00	**1600**
1650	54.50	62.64	54.84	-3.93	-2.63	-1.26	0.00	**1650**
1700	54.19	62.24	54.55	-3.90	-2.61	-1.25	0.00	**1700**
1750	53.98	61.96	54.32	-3.88	-2.60	-1.25	0.00	**1750**
1800	53.57	61.37	53.90	-3.82	-2.57	-1.23	0.00	**1800**
1850	53.32	61.03	53.64	-3.81	-2.54	-1.22	0.00	**1850**
1900	53.14	60.80	53.46	-3.79	-2.54	-1.22	0.00	**1900**
1950	52.90	60.49	53.23	-3.76	-2.52	-1.20	0.00	**1950**
2000	52.56	59.99	52.88	-3.72	-2.49	-1.19	0.00	**2000**
2050	52.35	59.71	52.66	-3.70	-2.48	-1.19	0.00	**2050**
2100	52.16	59.45	52.46	-3.69	-2.46	-1.19	0.00	**2100**
2150	52.02	59.29	52.32	-3.67	-2.46	-1.17	0.00	**2150**
2200	51.83	58.98	52.13	-3.66	-2.45	-1.17	0.00	**2200**
2250	51.56	58.64	51.94	-3.61	-2.42	-1.16	0.00	**2250**
2300	51.38	58.42	51.68	-3.60	-2.41	-1.16	0.00	**2300**
2350	51.22	58.20	51.51	-3.58	-2.40	-1.16	0.00	**2350**
2400	51.08	58.00	51.36	-3.57	-2.39	-1.14	0.00	**2400**
2450	50.92	57.80	51.21	-3.55	-2.39	-1.14	0.00	**2450**
2500	50.69	57.46	50.97	-3.52	-2.36	-1.13	0.00	**2500**
2550	50.55	57.27	50.83	-3.51	-2.36	-1.13	0.00	**2550**
2600	50.43	57.11	50.69	-3.51	-2.34	-1.13	0.00	**2600**
2650	50.30	56.95	50.57	-3.49	-2.33	-1.11	0.00	**2650**
2700	50.13	56.71	50.41	-3.48	-2.33	-1.11	0.00	**2700**
2750	49.93	56.41	50.20	-3.45	-2.30	-1.10	0.00	**2750**
2800	49.82	56.28	50.08	-3.43	-2.30	-1.10	0.00	**2800**
2850	49.72	56.12	49.97	-3.42	-2.29	-1.10	0.00	**2850**
2900	49.61	56.00	49.87	-3.42	-2.28	-1.10	0.00	**2900**
2950	49.47	55.79	49.72	-3.40	-2.27	-1.08	0.00	**2950**
3000	49.38	55.67	49.63	-3.39	-2.27	-1.08	0.00	**3000**

©2003 - State of Michigan

SQUARE FOOT COSTS

CLASS D TRI-LEVEL

Ground Area	FRAME Siding	FRAME Brick Veneer	MASONRY Block Walls	BASEMENT ADJUSTMENTS Wood Basement	BASEMENT ADJUSTMENTS Crawl Space Only	BASEMENT ADJUSTMENTS Slab on Grade Only	Ground Area
400	77.07	92.16	77.74	-2.54	-5.41	-5.93	**400**
450	73.72	87.79	74.32	-2.40	-5.23	-5.76	**450**
500	71.02	84.29	71.57	-2.28	-5.09	-5.61	**500**
550	68.83	81.43	69.33	-2.18	-4.96	-5.48	**550**
600	67.10	79.26	67.58	-2.10	-4.84	-5.36	**600**
650	65.41	77.00	65.86	-2.02	-4.74	-5.26	**650**
700	64.16	75.45	64.61	-1.95	-4.64	-5.16	**700**
750	62.99	73.92	63.41	-1.89	-4.56	-5.07	**750**
800	61.96	72.59	62.36	-1.83	-4.48	-4.99	**800**
850	60.97	71.23	61.35	-1.78	-4.40	-4.92	**850**
900	60.15	70.20	60.52	-1.73	-4.33	-4.85	**900**
950	59.43	69.26	59.79	-1.69	-4.27	-4.79	**950**
1000	58.70	68.26	59.05	-1.65	-4.21	-4.73	**1000**
1050	58.11	67.51	58.44	-1.61	-4.16	-4.67	**1050**
1100	57.56	66.81	57.90	-1.58	-4.10	-4.62	**1100**
1150	57.01	66.05	57.33	-1.55	-4.06	-4.56	**1150**
1200	56.50	65.37	56.81	-1.52	-4.01	-4.52	**1200**
1250	56.09	64.83	56.39	-1.49	-3.96	-4.47	**1250**
1300	55.65	64.25	55.95	-1.46	-3.92	-4.43	**1300**
1350	55.29	63.80	55.58	-1.43	-3.88	-4.39	**1350**
1400	54.87	63.17	55.14	-1.41	-3.84	-4.35	**1400**
1450	54.56	62.79	54.82	-1.39	-3.81	-4.31	**1450**
1500	54.23	62.35	54.49	-1.37	-3.77	-4.27	**1500**
1550	53.97	62.01	54.22	-1.35	-3.74	-4.24	**1550**
1600	53.58	61.44	53.83	-1.33	-3.71	-4.21	**1600**
1650	53.35	61.15	53.60	-1.31	-3.68	-4.17	**1650**
1700	53.09	60.79	53.33	-1.29	-3.65	-4.14	**1700**
1750	52.88	60.53	53.12	-1.27	-3.62	-4.11	**1750**
1800	52.58	60.07	52.80	-1.25	-3.59	-4.09	**1800**
1850	52.35	59.78	52.58	-1.24	-3.56	-4.06	**1850**
1900	52.17	59.57	52.40	-1.22	-3.54	-4.03	**1900**
1950	51.97	59.30	52.20	-1.21	-3.51	-4.01	**1950**
2000	51.72	58.90	51.92	-1.19	-3.49	-3.98	**2000**
2050	51.54	58.67	51.74	-1.18	-3.46	-3.96	**2050**
2100	51.37	58.43	51.57	-1.17	-3.44	-3.93	**2100**
2150	51.23	58.27	51.44	-1.15	-3.42	-3.91	**2150**
2200	51.07	58.05	51.27	-1.14	-3.40	-3.89	**2200**
2250	50.87	57.74	51.06	-1.13	-3.38	-3.87	**2250**
2300	50.72	57.55	50.90	-1.12	-3.36	-3.84	**2300**
2350	50.58	57.36	50.76	-1.11	-3.34	-3.82	**2350**
2400	50.45	57.18	50.62	-1.10	-3.32	-3.80	**2400**
2450	50.31	57.01	50.50	-1.09	-3.30	-3.79	**2450**
2500	50.14	56.73	50.32	-1.08	-3.28	-3.77	**2500**
2550	50.03	56.58	50.20	-1.07	-3.27	-3.75	**2550**
2600	49.92	56.44	50.07	-1.06	-3.25	-3.73	**2600**
2650	49.81	56.29	49.97	-1.05	-3.23	-3.71	**2650**
2700	49.67	56.10	49.83	-1.04	-3.21	-3.70	**2700**
2750	49.53	55.87	49.68	-1.03	-3.20	-3.68	**2750**
2800	49.42	55.74	49.58	-1.02	-3.18	-3.66	**2800**
2850	49.32	55.62	49.49	-1.01	-3.17	-3.65	**2850**
2900	49.23	55.50	49.40	-1.00	-3.15	-3.63	**2900**
2950	49.12	55.33	49.28	-1.00	-3.14	-3.62	**2950**
3000	49.04	55.23	49.19	-0.99	-3.12	-3.60	**3000**

©2003 - State of Michigan

ADJUSTMENTS AND ADDITIONS

HEATING AND COOLING SYSTEM ADJUSTMENTS: Additions or deductions per sq. ft. of ground area.

	Number of Stories							
	1	1+	1-1/4	1-1/2	1-3/4	2	Bi	Tri
HEATING SYSTEMS								
Forced-warm-air, with return ducts, add	.65	.65	.82	.98	1.15	1.31	1.31	.98
Forced-hot-water/steam, add	1.50	1.50	1.90	2.26	2.66	3.01	3.01	2.26
Electric wall heaters, baseboard type, add	.48	.48	.60	.72	.84	.96	.96	.72
Electric, ceiling radiant, add	.62	.62	.75	.92	1.10	1.23	1.23	.92
Electric wall heaters, deduct	-1.39	-1.39	-1.76	-2.08	-2.45	-2.78	-2.78	-2.08
Radiant (in-floor), add	1.39	1.39	1.76	2.09	2.46	2.79	2.79	2.09
Space heaters, deduct	-1.89	-1.89	-2.39	-2.83	-3.33	-3.78	-3.78	-2.83
Wall or floor furnace, no ducts, deduct	- .78	- .78	- .99	-1.17	-1.38	-1.56	-1.56	-1.17
HEATING AND COOLING, COMBINED SYSTEMS								
Forced air, A/C using heating ducts, add	2.59	2.59	3.26	3.88	4.56	5.17	5.17	3.88
Heat pump with supplemental heat, add	3.17	3.17	4.00	4.75	5.59	6.34	6.34	4.75
Air conditioning only with separate ducts, add	4.20	4.20	5.30	6.30	7.40	8.39	8.39	6.30
No heating, deduct	-2.50	-2.50	-3.16	-3.74	-4.40	-4.99	-4.99	-3.74

Wood-burning unit added on to furnace: Add $1,200 to the final cost of home. Includes material and labor to connect to existing forced-air system. Extra chimney or flue costs which may be required by local codes are not included.

OVERHANGS

Add per square foot as follows:

Stories	Full Story	3/4	1/2
Siding and block	$28.00	$22.45	$14.10
Brick veneer	33.35	26.45	16.15

MICHIGAN BASEMENT

Michigan basements can frequently be estimated by using 1/2 of the crawl space deduction. Deduct for no concrete floor: $2.41 per square foot of basement area.

HOUSE ON PIERS

When piers replace a full foundation wall, multiply the crawl space deduction by 1.45.

PLUMBING, SEWER AND WATER

Average cost per fixture	$ 525
Extra bath, three fixtures	1,650
Two fixtures	1,100
Water softener, automatic	1,100
Manual	700
Solar water heating system with panels	3,325
No plumbing, deduct	2,725
Extra toilet	540
Extra sink	325
Separate shower (fiberglass)	580
Ceramic tile floor	385
Ceramic tile wainscoting	665
Ceramic tile tub alcove	220
Bathroom vent fan	100

WATER AND WASTE DISPOSAL

City water and sewer connections	$1,825
Water well 200 ft.	4,400
Septic system, 1,000 gallons	2,720
2,000 gallons	4,500

Locally derived costs should be entered on the front of the residential card.

MASONRY TRIM

Brick or equal, per sq. ft. of wall area	$ 7.85
Brick 4' high, per lin. ft.	30.75
Brick, full 1-story, per lin. ft.	61.50
Brick, full 2-story, per lin. ft.	131.00
Stone or equal, per sq. ft. of wall area	9.75

BASEMENT FINISH

Costs per square foot of floor area:

Recreation room	$ 9.65
Finished living area	14.75
Walk-out, hillside, cost of door	625

BUILT-INS

Appliance allowance, (if not itemized)	$1,235
Cooktop, countertop, four burners	290
Dishwasher, built-in	475
Garbage disposal	165
Heater, bathroom, without fan	100
With fan	150
Hot tub, with whirlpool, built-in	3,815
Hood, range, unvented	135
Vented	240
Intercom system, master station	345
Satellite	75
Whirlpool tub (Jacuzzi)	2,995
Whirlpool tub when it replaces regular bathtub	2,470
Oven, single, built-in	605
Microwave	335
Range, drop in, with standard oven	595
With self cleaning oven	770
Sauna with heater and controls	3,850
Trash compactor	480
Vacuum, central system	1,345

CONVERSION FACTORS: For 2-1/2-, 3- and 3-1/2-story Single-family Residences
Multiply the 2-story cost for the equivalent Ground Area by the following factors:
2-1/2-story, use 1.16; 3-story, use 1.36; 3-1/2-story, use 1.52.

©2003 - State of Michigan

ADJUSTMENTS AND ADDITIONS

CLASS D

FIREPLACES

Inside chimney, 1-story	$2,600
1-1/2- and 2-story	3,075
add for 2nd fireplace, same stack	2,200
Two-sided fireplace	3,775
Outside chimney, 1-story	3,050
1-1/2- and 2-story	3,700
Prefabricated, 1-story	1,330
Add if 2-story	290
Heat-circulating device	490
Raised hearth	160
Wood burning stove, free standing (permanent type)	950
Direct-vented (no chimney) gas fireplace	725

PORCHES AND DECKS: COMPONENT GUIDE

	CPP	CCP	CSEP	CGEP	WPP	WCP	WSEP	WGEP
FOUNDATION	X	X	X	X	X	X	X	X
FOOTINGS	X	X	X	X	X	X	X	X
STEPS	X	X	X	X	X	X	X	X
RAILINGS OR KNEE WALL		X	X			X	X	
ROOF		X	X	X		X	X	X
CEILING		X	X	X		X	X	X
SCREEN ON STUD WALL			X				X	
STUD WALL W/ WINDOWS AND SCREENS				X				X

	CONCRETE FLOOR with 42" foundation				WOOD FLOOR with 42" foundation				
Sym-bol	CPP	CCP	CSEP	CGEP	WPP	WCP	WSEP	WGEP	Sym-bol
Size for Rates	PLATFORM PORCH	COVERED PORCH	SCREEN-ENCLOSED PORCH	GLASS-ENCLOSED PORCH	PLATFORM PORCH	COVERED PORCH	SCREEN-ENCLOSED PORCH	GLASS-ENCLOSED PORCH	Size for Rates
12	34.35	67.40	82.60	107.10	33.60	66.70	81.80	106.35	**12**
25	25.55	49.05	59.95	77.65	24.80	48.35	59.25	76.90	**25**
50	18.00	34.60	41.85	53.65	17.30	33.90	41.15	52.90	**50**
75	15.55	29.75	35.80	45.65	14.75	29.05	35.10	44.90	**75**
100	14.25	27.35	32.80	41.65	13.55	26.60	32.05	40.90	**100**
125	12.60	24.40	29.00	36.55	11.85	23.60	28.25	35.80	**125**
150	11.70	22.80	27.00	33.90	11.00	22.05	26.30	33.15	**150**
175	11.15	21.70	25.60	32.00	10.35	20.90	24.90	31.25	**175**
200	10.50	20.50	24.15	30.00	9.75	19.75	23.40	29.30	**200**
250	9.75	19.10	22.40	27.70	9.05	18.40	21.70	26.95	**250**
300	9.20	18.25	21.20	26.15	8.50	17.45	20.50	25.45	**300**
350	8.85	17.50	20.35	24.95	8.10	16.75	19.60	24.25	**350**
400	8.60	17.05	19.80	24.20	7.85	16.35	19.05	23.50	**400**
450	8.20	16.40	18.95	23.10	7.50	15.65	18.25	22.35	**450**
500	7.85	15.75	18.10	21.90	7.15	15.00	17.35	21.20	**500**
550	7.55	15.15	17.40	21.00	6.85	14.45	16.65	20.30	**550**
600	7.35	14.85	17.00	20.40	6.60	14.10	16.25	19.70	**600**
650	7.30	14.75	16.85	20.25	6.55	14.00	16.10	19.55	**650**
700	7.25	14.65	16.75	20.10	6.50	13.95	16.00	19.40	**700**

	ADD	DEDUCT
Size for Rates	BASEMENT UNDER	SHALLOW FOUNDATION
12	22.75	-15.65
25	16.65	-11.25
50	11.45	- 7.45
75	9.65	- 6.20
100	8.80	- 5.60
125	7.60	- 4.75
150	7.05	- 4.35
175	6.60	- 4.05
200	6.15	- 3.70
250	5.65	- 3.35
300	5.25	- 3.10
350	5.05	- 2.90
400	4.85	- 2.75
450	4.55	- 2.60
500	4.35	- 2.40
550	4.15	- 2.30
600	4.00	- 2.20
650	3.95	- 2.15
700	3.95	- 2.10

For 2-story porches, add 22% for open porches and 60% for enclosed porches. Wood decks include posts on minimal footings, joists, girder, railings, decking, and up to four risers. For additional risers add $45.00 each. For wood decks with roofs, subtract the platform porch rate from the covered porch rate (at the appropriate size for rates) and add the difference to the appropriate wood deck rate.

	WOOD DECKS			
Size for Rates	TREATED WOOD	PINE OR SIMILAR	REDWOOD OR CEDAR	Size for Rates
12	19.75	15.45	29.60	**12**
25	12.95	10.20	19.40	**25**
50	9.40	7.45	14.05	**50**
75	8.20	6.50	12.30	**75**
100	7.60	6.05	11.35	**100**
125	7.15	5.70	10.75	**125**
150	6.85	5.45	10.25	**150**
175	6.70	5.25	9.95	**175**
200	6.50	5.15	9.75	**200**
250	6.25	5.00	9.40	**250**
300	6.10	4.85	9.15	**300**
350	5.95	4.75	8.90	**350**
400	5.90	4.70	8.85	**400**
450	5.85	4.65	8.75	**450**
500	5.75	4.55	8.60	**500**
550	5.65	4.55	8.50	**550**
600	5.65	4.50	8.50	**600**
650	5.65	4.50	8.45	**650**
700	5.60	4.45	8.45	**700**

©2003 - State of Michigan

ADJUSTMENTS AND ADDITIONS

GARAGES: Base costs include electric lighting.

On slab – 18" Foundation				On slab – 42" Foundation				
Size in Sq. Ft.	Siding	Block	Brick	Siding	Block	Brick	Finished Interior	Size in Sq. Ft.
240	23.75	24.85	30.20	26.85	27.65	32.65	4.45	**240**
308	21.15	22.05	26.50	23.75	24.45	28.45	4.05	**308**
352	20.00	20.75	24.55	22.25	23.00	26.50	3.75	**352**
400	18.85	19.65	23.00	20.90	21.65	24.75	3.65	**400**
440	18.05	18.70	21.75	20.00	20.55	23.50	3.50	**440**
480	17.40	18.05	20.85	19.15	19.80	22.30	3.40	**480**
528	16.70	17.25	19.80	18.35	18.85	21.25	3.20	**528**
576	16.05	16.50	18.90	17.65	18.10	20.25	3.15	**576**
600	15.75	16.15	18.45	17.30	17.75	19.80	3.10	**600**
624	15.45	15.80	18.05	16.90	17.40	19.35	3.05	**624**
800	13.90	14.15	15.90	14.95	15.40	16.95	2.70	**800**
1020	12.40	12.70	13.90	13.35	13.75	14.80	2.60	**1020**
Common wall deduction for attached garage								
1/2-wall	500	575	950	575	675	1,050	-----	**1/2-wall**
1-wall	975	1,150	1,875	1,175	1,375	2,125	-----	**1-wall**
1-1/2-wall	1,425	1,725	2,850	1,800	2,025	3,175	-----	**1-1/2-wall**
2-wall	1,925	2,300	3,800	2,375	2,725	4,200	-----	**2-wall**

No concrete floor, deduct $3.00

Base cost includes uninsulated single or double garage doors, depending on the size of the garage. For insulated doors, add per square foot of door:

Single . . . . . $1.18 Double $1.02

Door opener, add – radio controlled 350

Mechanical 325

For basement garage, add to residence:

1-car . . . . . $ 350 2-car $2,025
1-1/2-car 1,750 3-car 3,225

For pole construction deduct 25% from 18" Foundation, Siding rate.

For living area above garage use overhang rates. (Base cost contains forced-warm-air heat only. For other types of heating/cooling, use the 1-Story Heating and Cooling Adjustments for this square footage only).

For storage area above garage, add $3.75 per square foot (stairway, floorboards, electrical, 6-foot headroom).

BALCONIES (Airing)

Costs per square foot of floor area:

Wood floors $13.00
Cement composition floor 15.50
Add for roof 5.00

BREEZEWAYS

Cost per square foot of floor area. Includes roof, ceiling, floor and walls. Heat not included.

	Finished Interior	Unfinished Interior
Framed wall, solid	$26.75	$22.25
Knee wall w/glass and screen panel .	40.75	34.00
Screen only	15.50	12.75

CARPORTS

Cost per square foot of area covered. Includes roof structure and cover, posts, bracing, paint and concrete slab.

Aluminum, corrugated $7.25
Composition shingles 7.50
Built-up tar and gravel 7.75
Wood shingles 8.50
Fiberglass 6.50

DRIVES, WALKS AND PATIOS

Crushed rock $1.20
Asphalt paving 1.42
Asphalt paving w/sealer 1.81
Concrete paving 3-1/2" 2.98
4" 3.12
4" reinforced 3.39
5" reinforced 3.67
Brick on 2" sand base 7.93
Flagstone on 2" sand base 9.03
Patio blocks on 2" sand base 6.84

Please note that the above costs are valid for areas of 100 to 1,000 square feet. For areas less than 100 square feet, add from 10% to 100% per square foot. For areas greater than 1,000 square feet, deduct from 10% to 30% per square foot.

©2003 - State of Michigan

SOLAR ROOMS/GREENHOUSES

The following costs are for stock lean-to greenhouses with double-glazed tempered glass. Costs are based on an average ceiling height of 8 feet. Costs include foundation, vents, electrical and concrete floor, but do not include floor finish or heating.

SQUARE FOOT COSTS: Per square foot of floor area.

Curved- and straight-eave lean-to: Gable ends are not included and must be added from table below.

Floor Area	50	75	100	150	200	300
On 16" base wall	$85.00	$78.50	$72.25	$66.25	$61.75	$57.00
Without base wall	89.00	83.25	77.25	68.75	64.75	59.00

SQUARE FOOT ADJUSTMENTS: Make the following adjustments to the square foot costs above.

Professional labor	(base)	Tempered glass	(base)	Double glazed	(base)
Amateur workmanship	-15%	Not tempered	-13%	Single glazed	-20%
Custom Installation	+25%	Tinted glass	+10%	Triple glazed	+18%
				Extra tall bays	+20%

LUMP SUM ADJUSTMENTS: Make the following Lump Sum additions as necessary.

Gable End	Width of Gable				
	up to 3'	4' to 5'	6' to 8'	9' to 10'	11' to 13'
On 16" base wall	$405	$700	$1,000	$1,400	$1,850
Without base wall	420	760	1,250	1,575	2,025

Extra tall gable: +30%.

Shades per bay: + $280; Shade motors: + $235; Heaters: + $290; Venting fans: + $515; Built-in windows, 3 sq.ft., double-glazed: + $100; Doors with screens, 68" x 60": + $350.

IMPORTANT NOTE: Some solar rooms and greenhouses may be exempt from taxation pursuant to the provisions of **MCL 211.7h**.

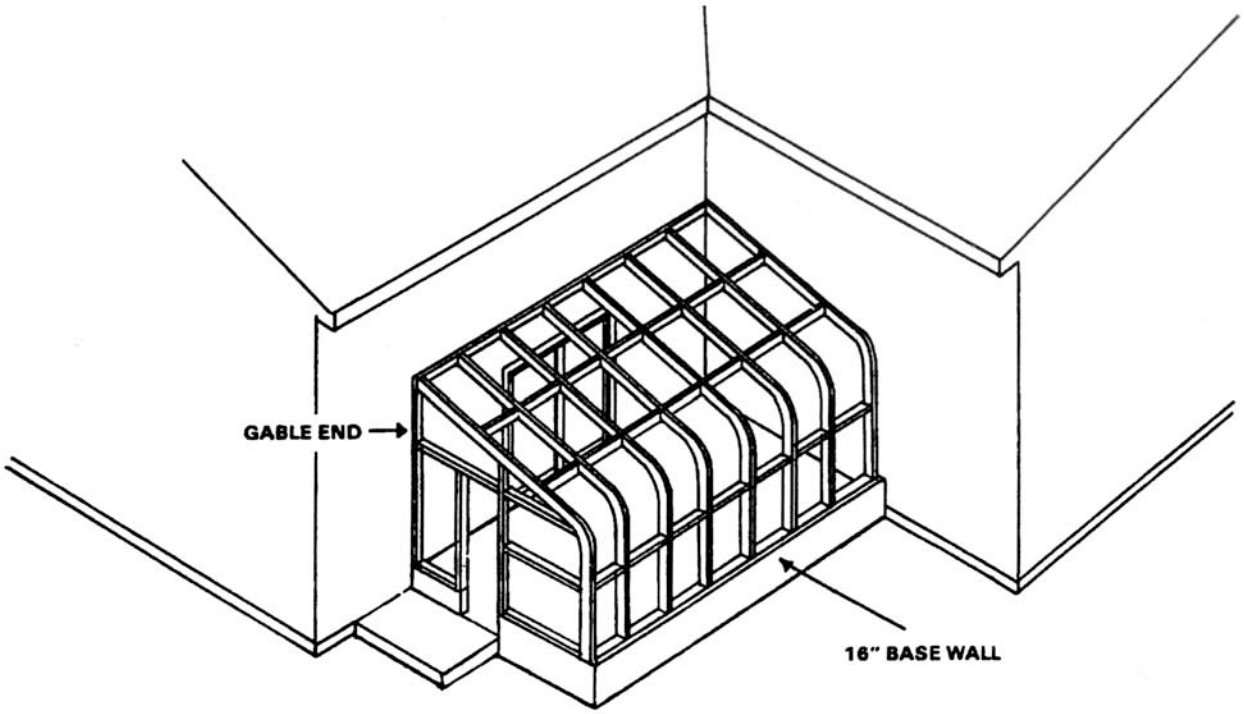

SOLAR ROOM/GREENHOUSE
CURVED-EAVE LEAN-TO

©2003 - State of Michigan

©2003 - State of Michigan